ASUS All-in-One PC

User Guide

V220 Series

E11889
Revised Edition
July 2016

COPYRIGHT INFORMATION

No part of this manual, including the products and software described in it, may be reproduced, transmitted, transcribed, stored in a retrieval system, or translated into any language in any form or by any means, except documentation kept by the purchaser for backup purposes, without the express written permission of ASUSTeK COMPUTER INC. ("ASUS").

ASUS PROVIDES THIS MANUAL "AS IS" WITHOUT WARRANTY OF ANY KIND, EITHER EXPRESS OR IMPLIED, INCLUDING BUT NOT LIMITED TO THE IMPLIED WARRANTIES OR CONDITIONS OF MERCHANTABILITY OR FITNESS FOR A PARTICULAR PURPOSE. IN NO EVENT SHALL ASUS, ITS DIRECTORS, OFFICERS, EMPLOYEES OR AGENTS BE LIABLE FOR ANY INDIRECT, SPECIAL, INCIDENTAL, OR CONSEQUENTIAL DAMAGES (INCLUDING DAMAGES FOR LOSS OF PROFITS, LOSS OF BUSINESS, LOSS OF USE OR DATA, INTERRUPTION OF BUSINESS AND THE LIKE), EVEN IF ASUS HAS BEEN ADVISED OF THE POSSIBILITY OF SUCH DAMAGES ARISING FROM ANY DEFECT OR ERROR IN THIS MANUAL OR PRODUCT.

Products and corporate names appearing in this manual may or may not be registered trademarks or copyrights of their respective companies, and are used only for identification or explanation and to the owners' benefit, without intent to infringe.

SPECIFICATIONS AND INFORMATION CONTAINED IN THIS MANUAL ARE FURNISHED FOR INFORMATIONAL USE ONLY, AND ARE SUBJECT TO CHANGE AT ANY TIME WITHOUT NOTICE, AND SHOULD NOT BE CONSTRUED AS A COMMITMENT BY ASUS. ASUS ASSUMES NO RESPONSIBILITY OR LIABILITY FOR ANY ERRORS OR INACCURACIES THAT MAY APPEAR IN THIS MANUAL, INCLUDING THE PRODUCTS AND SOFTWARE DESCRIBED IN IT.

Copyright © 2016 ASUSTeK COMPUTER INC. All Rights Reserved.

LIMITATION OF LIABILITY

Circumstances may arise where because of a default on ASUS' part or other liability, you are entitled to recover damages from ASUS. In each such instance, regardless of the basis on which you are entitled to claim damages from ASUS, ASUS is liable for no more than damages for bodily injury (including death) and damage to real property and tangible personal property; or any other actual and direct damages resulted from omission or failure of performing legal duties under this Warranty Statement, up to the listed contract price of each product.

ASUS will only be responsible for or indemnify you for loss, damages or claims based in contract, tort or infringement under this Warranty Statement.

This limit also applies to ASUS' suppliers and its reseller. It is the maximum for which ASUS, its suppliers, and your reseller are collectively responsible.

UNDER NO CIRCUMSTANCES IS ASUS LIABLE FOR ANY OF THE FOLLOWING: (1) THIRD-PARTY CLAIMS AGAINST YOU FOR DAMAGES; (2) LOSS OF, OR DAMAGE TO, YOUR RECORDS OR DATA; OR (3) SPECIAL, INCIDENTAL, OR INDIRECT DAMAGES OR FOR ANY ECONOMIC CONSEQUENTIAL DAMAGES (INCLUDING LOST PROFITS OR SAVINGS), EVEN IF ASUS, ITS SUPPLIERS OR YOUR RESELLER IS INFORMED OF THEIR POSSIBILITY.

SERVICE AND SUPPORT

Visit our multi-language web site at **https://www.asus.com/support**

Contents

About this manual....6
Conventions used in this manual....7
Typography....7
Icons....8
Safety information....9
Setting up your system....9
Care during use....9
Sound Pressure Warning....11
Adapter....11
DC Fan Warning....11
Package contents....12

Chapter 1: Hardware Setup

Getting to know your ASUS All-in-One PC....13
Front view....13
Rear view....15
Side view....18

Chapter 2: Using your ASUS All-in-One PC

Assembling the base....21
Positioning your ASUS All-in-One PC....22
Connecting a wired keyboard and mouse....23
Connecting a wireless keyboard and mouse (optional)....24
Powering on your ASUS All-in-One PC....25

Chapter 3: Working with Windows® 10

Starting for the first time....27
Start menu....28
Launching the Start menu....29
Opening programs from the Start menu....29
Windows® apps....30
Working with Windows® apps....31
Customizing Windows® apps....31
Task view....34
Snap feature....35
Snap hotspots....35
Action Center....37
Other keyboard shortcuts....38
Connecting to wireless networks....40
Wi-Fi....40
Bluetooth....41
Connecting to wired networks....42
Configuring a dynamic IP/PPPoE network connection....42
Configuring a static IP network connection....43
Turning your ASUS All-in-One PC off....44
Putting your ASUS All-in-One PC to sleep....45

Chapter 4: Recovering your system

Entering the BIOS Setup....47
Quickly enter the BIOS....47
Recovering your system....48
Performing a recovery option....49

Chapter 5: Upgrading your ASUS All-in-One PC

Installing a Random-access Memory module....51

Appendices

Notices.....55
Federal Communication Commission Interference Statement.....55
RF exposure warning.....56
Canadian Department of Communications Statement.....57
IC Radiation Exposure Statement for Canada.....57
Canada, Industry Canada (IC) Notices.....57
Radio Frequency (RF) Exposure Information.....58
Canada, avis d'Industry Canada (IC).....58
Informations concernant l'exposition aux frequences radio (RF).....58
India RoHS.....58
Declaration of Conformity (R&TTE directive 1999/5/EC)*.....59
Wireless Operation Channel for Different Domains.....59
CE Mark Warning.....60
CE marking for devices without wireless LAN/Bluetooth.....60
CE marking for devices with wireless LAN/ Bluetooth.....60
REACH.....62
Global Environmental Regulation Compliance and Declaration.....62
ASUS Recycling/Takeback Services.....62
Coating Notice.....63
Prevention of Hearing Loss.....63
ENERGY STAR complied product.....64

About this manual

This manual provides information about the hardware and software features of your ASUS All-in-One PC, organized through the following chapters:

Chapter 1: Hardware Setup

This chapter details the hardware components of your ASUS All-in-One PC.

Chapter 2: Using your ASUS All-in-One PC

This chapter provides you with information on using your ASUS All-in-One PC.

Chapter 3: Working with Windows® 10

This chapter provides an overview of using Windows® 10 in your ASUS All-in-One PC.

Chapter 4: Recovering your system

This chapter provides recovery options for your ASUS All-in-One PC.

Chapter 5: Upgrading your ASUS All-in-One PC

This chapter guides you through the process of replacing and upgrading parts of your All-in-One PC.

Appendices

This section includes notices and safety statements for your ASUS All-in-One PC.

Conventions used in this manual

To highlight key information in this manual, some texts are presented as follows:

IMPORTANT! This message contains vital information that must be followed to complete a task.

NOTE: This message contains additional information and tips that can help complete tasks.

WARNING! This message contains important information that must be followed to keep you safe while performing tasks and prevent damage to your device's data and components.

Typography

Bold =This indicates a menu or an item that must be selected.

Italic = This indicates sections that you can refer to in this manual.

Icons

The icons below indicate the devices you can use for completing a series of tasks or procedures on your ASUS All-in-One PC.

= (optional) Use the wired/wireless mouse.

= (optional) Use the wired/wireless keyboard.

All illustrations and screenshots in this manual are for reference only. Actual product specifications and software screen images may vary with territories. Visit the ASUS website at www.asus.com for the latest information.

Safety information

Your All-in-One ASUS All-in-One PC is designed and tested to meet the latest standards of safety for information technology equipment. However, to ensure your safety, it is important that you read the following safety instructions.

Setting up your system

- Read and follow all instructions in the documentation before you operate your system.
- Do not use this product near water or a heated source such as a radiator.
- Be cautious while moving the system to prevent injuries.
- Set up the system on a stable surface.
- Openings on the chassis are for ventilation. Do not block or cover these openings. Ensure that you leave plenty of space around the system for ventilation. Never insert objects of any kind into the ventilation openings.
- Use this product in environments with ambient temperatures between 0˚C and 40˚C.
- If you use an extension cord, ensure that the total ampere rating of the devices plugged into the extension cord does not exceed its ampere rating.

Care during use

- Do not walk on the power cord or allow anything to rest on it.
- Do not spill water or any other liquids on your system.

- When the system is turned off, a small amount of electrical current still remains in the product. Always unplug all power, modem, and network cables from the power outlets before cleaning the system.
- Do not use an abrasive cleaner or a coarse cloth when cleaning the screen.
- If you encounter the following technical problems with the product, unplug the power cord and contact a qualified service technician or your retailer.
  - The power cord or plug is damaged.
  - Liquid has been spilled into the system.
  - The system does not function properly even if you follow the operating instructions.
  - The system was dropped or the cabinet is damaged.
  - The system performance changes.

Sound Pressure Warning

Excessive sound pressure from earphones or headphones can cause hearing loss or permanent damage to hearing. Increasing the volume and equalizer beyond default levels increases the output voltage and sound pressure produced by the earphones or headphones.

Adapter

1. Adapter specifications

   Input voltage: 100–240Vac

   Input frequency: 50–60Hz

   Rating output voltage: 19Vdc

2. It is recommended that the power socket is in close proximity to the ASUS All-in-One PC.

DC Fan Warning

Please note that the DC fan is a moving part and can cause harm when used improperly. Keep away from the fan when using the product.

Package contents

ASUS All-in-One PC

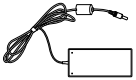

AC adapter

Power cord

Warranty card

Keyboard (optional)

Mouse (optional)

Quick Start Guide

KBM USB receiver dongle (optional)

NOTE:

- If any of the items are damaged or missing, contact your retailer.
- The keyboard, mouse, and power supply illustrations are for reference only. Actual product specifications may vary with territories.

Chapter 1: Hardware Setup

Getting to know your ASUS All-in-One PC

Front view

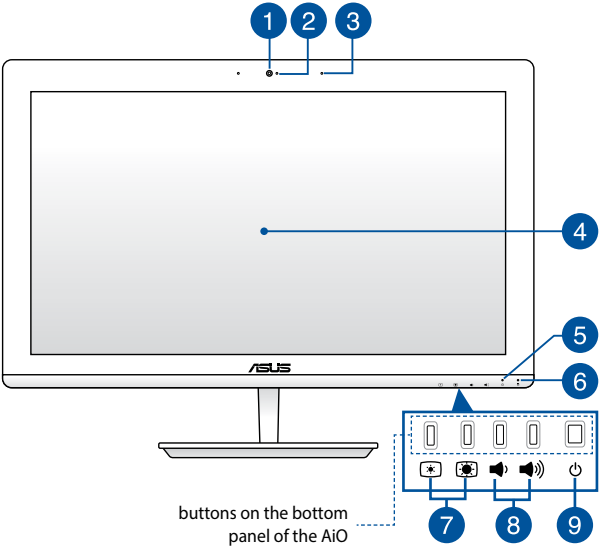

1 **Camera**

The built-in camera allows you to take pictures or record videos using your ASUS All-in-One PC.

2 **Camera indicator**

The camera indicator lights up when the built-in camera is in use.

3 **Microphone**

This built-in microphone can be used for video conferencing, voice narration, audio recording, and multimedia applications.

4 **LCD display panel**

The LCD display panel provides excellent viewing features for photos, videos, and other multimedia files.

5 **Power indicator**

This LED power indicator lights up when the ASUS All-in-One PC is turned on.

6 **Drive activity indicator**

This indicator lights up when your ASUS All-in-One PC is accessing the internal storage drives.

7 **Brightness adjust**

These buttons allows you to adjust the brightness or contrast settings.

8 **Volume adjust**

These buttons allows you to adjust the system volume.

9 **Power button**

Press this button to turn on your ASUS All-in-One PC.

Rear view

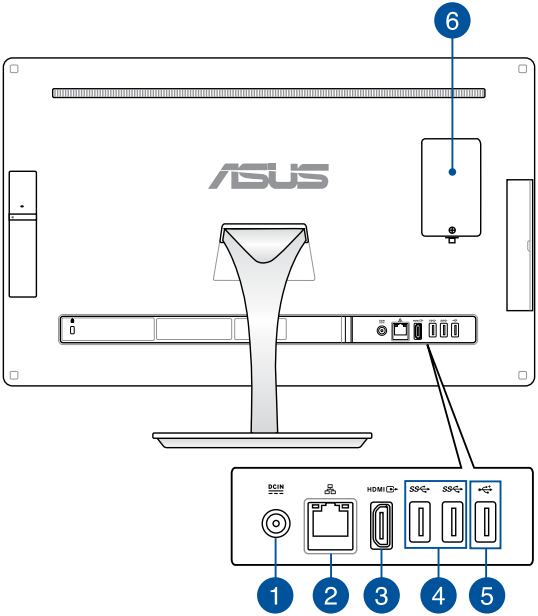

1 DCIN

Power input

The bundled power adapter converts AC power to DC power for use with this jack. Power supplied through this jack supplies power to the ASUS All-in-One PC. To prevent damage to the ASUS All-in-One PC, always use the bundled power adapter.

WARNING! The power adapter may become warm or hot when in use. Do not cover the adapter and keep it away from your body.

2

LAN port

This 8-pin RJ-45 LAN port supports a standard Ethernet cable for connection to a local network.

3 HDMI

HDMI output port

This port allows you to connect your ASUS All-in-One PC to another HDMI-compatible device for file sharing or extending your display monitor.

4

USB 3.0 port

This USB 3.0 (Universal Serial Bus) port provides a transfer rate of up to 5 Gbit/s and is backward compatible to USB 2.0.

5 **USB 2.0 port**

This USB (Universal Serial Bus) port is compatible with USB 2.0 or USB 1.1 devices such as keyboards, pointing devices, flash disk drives, external HDDs, speakers, cameras and printers.

6 **Random-access memory module (RAM) compartment**

This compartment secures the RAM (random-access memory) module of your All-in-One PC.

Side view

Left side view

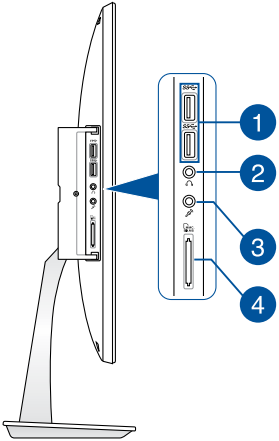

Right side view

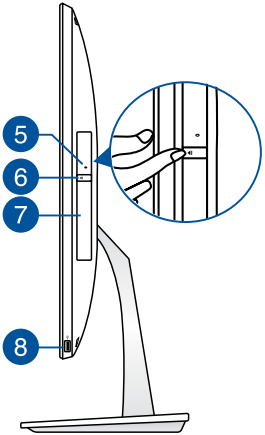

1 **USB 3.0 port**

This USB 3.0 (Universal Serial Bus) port provides a transfer rate of up to 5 Gbit/s and is backward compatible to USB 2.0.

2 **Headphone jack**

This port allows you to connect amplified speakers or headphones.

3

Microphone jack

The microphone jack is designed to connect to a microphone used for video conferencing, voice narrations, or simple audio recordings.

4

Memory card reader

This ASUS All-in-One PC has a built-in memory card reader slot that supports Memory stick, Memory stick Pro, MMC, SD, SDHC, SDXC cards.

5

Optical Disc Drive manual eject hole

The manual eject hole is used to eject the drive tray in case the electronic eject button does not work.

WARNING! Use the manual eject hole only when the electronic eject button does not work.

6

Optical Disk Drive electronic eject button

Press this button to eject the optical drive tray.

You can also eject the drive tray using your media player or by right-clicking the optical drive icon in Windows File Explorer and clicking Eject.

7

Optical Drive

This support compact discs (CD), digital video discs (DVD), and/or Blu-ray discs (BD), and recordable (R) or re-writable (RW) discs. Consult product specifications for details on included optical drive.

NOTE: DVD R/RW is optional and is available on selected models only.

8

USB 2.0 port

This USB (Universal Serial Bus) port is compatible with USB 2.0 or USB 1.1 devices such as keyboards, pointing devices, flash disk drives, external HDDs, speakers, cameras and printers.

NOTE: Use this port if the cable of your mouse or keyboard is not long enough to be connected on the rear USB 2.0 port.

Chapter 2:
Using your ASUS All-in-One PC

Assembling the base

1. Place the ASUS All-in-One PC on a flat and stable surface such as a table or desk.
2. Align and attach the base to the stand. Ensure that the stand is fitted firmly and aligned properly to the base.

NOTE: The stand fits to the base in one orientation only.

3. Secure the base to the stand with the bundled stand screw.

NOTE: The bundled stand screw is tool-less by design but you can also use a Phillips or a flat screwdriver, a coin, or a token to install it.

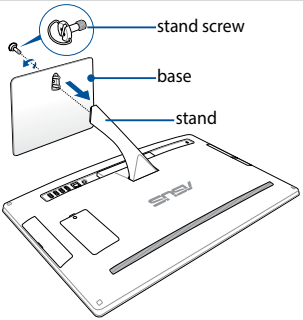

NOTE: The illustration above is for reference only. The actual All-in-One PC may slightly vary depending on the model but the installation steps remains the same.

Positioning your ASUS All-in-One PC

1. Place your ASUS All-in-One PC on a flat surface such as a table or desk.
2. Tilt the display to an angle between -5° to 25°.

IMPORTANT! Avoid adjusting the display to an angle beyond the recommended values or you may risk damaging the ASUS All-in-One PC.

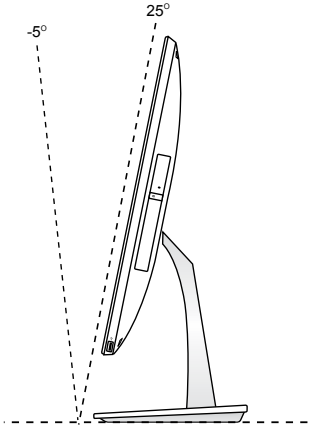

Connecting a wired keyboard and mouse

Connect the keyboard and the mouse to the USB ports on the rear or side panel.

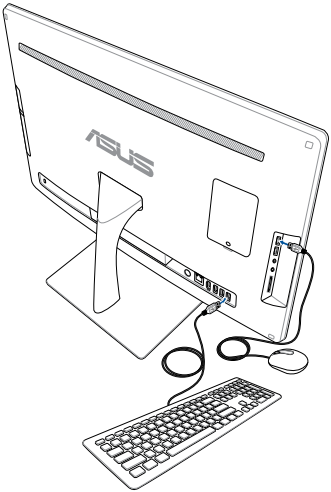

Connecting a wireless keyboard and mouse (optional)

1. Install batteries into the wireless keyboard and mouse.
2. Connect the wireless dongle for keyboard and mouse to a USB port on the rear or on the side panel.

NOTE: We recommend to use the USB 2.0 port for keyboard and mouse.

3. You can begin using the wireless keyboard and mouse.

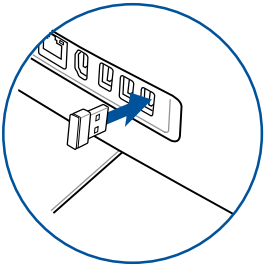

NOTE:

- Reconnect the wireless keyboard and mouse with the wireless dongle if they lose connection. Avoid using either devices alongside other wireless devices. Position the mouse and keyboard at least 20 cm away from other wireless hardware to avoid interference.
- The illustrations above are for reference only. Actual hardware and specifications of the optional wired or wireless keyboard and mouse may vary.

Powering on your ASUS All-in-One PC

Connect the supplied AC adapter to the **DC IN** jack on the rear panel (1, 2, and 3) and then press the **Power button** on the front panel (4) of the ASUS All-in-One PC to power on the system.

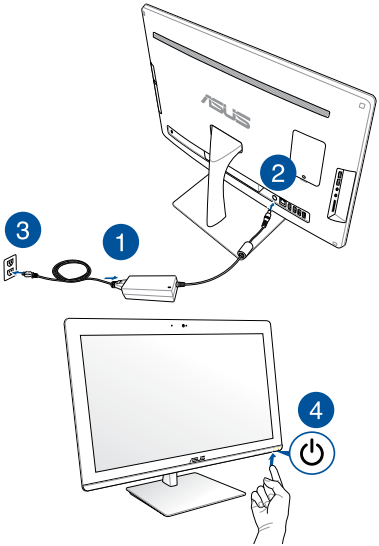

WARNING! DO NOT connect the AC power cord to an AC outlet prior to connecting the DC plug to the system. Doing so may damage the AC-DC adapter.

NOTE: For details on turning off your ASUS All-in-One PC, refer to the section **Turning your ASUS All-in-One PC off** in **Working with Windows® 10**.

Chapter 3: Working with Windows® 10

Starting for the first time

When you start your ASUS All-in-One PC for the first time, a series of screens appear to guide you in configuring your Windows® 10 operating system.

To start your ASUS All-in-One PC for the first time:

1. Press the power button on your ASUS All-in-One PC. Wait for a few minutes until the setup screen appears.
2. From the setup screen, pick your region and a language to use on your ASUS All-in-One PC.
3. Carefully read the License Terms. Select **I accept**.
4. Follow the onscreen instructions to configure the following basic items:
   - Personalize
   - Get online
   - Settings
   - Your account
5. After configuring the basic items, Windows® 10 proceeds to install your apps and preferred settings. Ensure that your ASUS All-in-One PC is kept powered on during the setup process.
6. Once the setup process is complete, the Desktop appears.

NOTE: The screenshots in this chapter are for reference only.

Start menu

The Start menu is the main gateway to your ASUS All-in-One PC's programs, Windows® apps, folders, and settings.

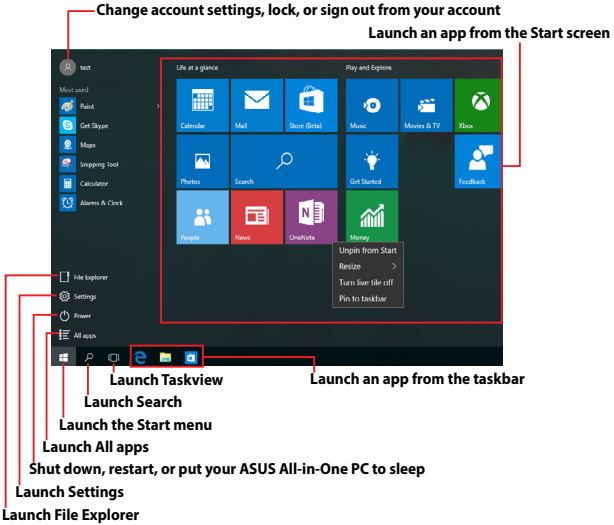

You can use the Start menu to do these common activities:

- Start programs or Windows® apps
- Open commonly used programs or Windows® apps
- Adjust ASUS All-in-One PC settings
- Get help with the Windows operating system
- Turn off your ASUS All-in-One PC
- Log off from Windows or switch to a different user account

Launching the Start menu

Position your mouse pointer over the Start button in the lower-left corner of your desktop then click it.

Press the Windows logo key on your keyboard.

Opening programs from the Start menu

One of the most common uses of the Start menu is opening programs installed on your ASUS All-in-One PC.

Position your mouse pointer over the program then click to launch it.

Use the arrow keys to browse through the programs. Press enter to launch it.

NOTE: Select **All apps** at the bottom of the left pane to display a full list of programs and folders on your ASUS All-in-One PC in alphabetical order.

Windows® apps

These are apps pinned on the right pane of the Start menu and displayed in tiled-format for easy access.

NOTE: Some Windows® apps require signing in to your Microsoft account before they are fully launched.

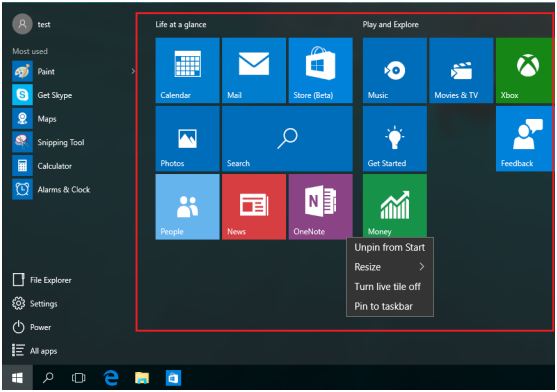

Working with Windows® apps

Use your ASUS All-in-One PC's touchpad or keyboard to launch, customize, and close apps.

Launching Windows® apps from the Start menu

Position your mouse pointer over the app then click to launch it.

Use the arrow keys to browse through the apps. Press

to launch an app.

Customizing Windows® apps

You can move, resize, unpin, or pin apps to the taskbar from the Start menu using the following steps:

Moving apps

Position your mouse pointer over the app, then drag and drop the app to a new location.

Resizing apps

Position your mouse pointer over the app and right-click it, then click **Resize** and select an app tile size.

Use the arrow keys to navigate to the app. Press , then select **Resize** and select an app tile size.

Unpinning apps

Position your mouse pointer over the app and right-click it, then click **Unpin from Start**.

Use the arrow keys to navigate to the app. Press , then select **Unpin from Start**.

Pinning apps to the taskbar

Position your mouse pointer over the app and right-click it, then click **Pin to taskbar**.

Use the arrow keys to navigate to the app. Press , then select **Pin to taskbar**.

Pinning more apps to the Start menu

From **All apps,** position your mouse pointer over the app you want to add to the Start menu and right-click it, then click **Pin to Start**.

From **All apps,** press on the app that you want to add to the Start menu, then select **Pin to Start**.

Task view

Quickly switch between opened apps and programs using the task view feature, you can also use task view to switch between desktops.

Launching task view

Position your mouse pointer over the icon on the taskbar and click it.

Press + on your keyboard.

Snap feature

The Snap feature displays apps side-by-side, allowing you to work or switch between apps.

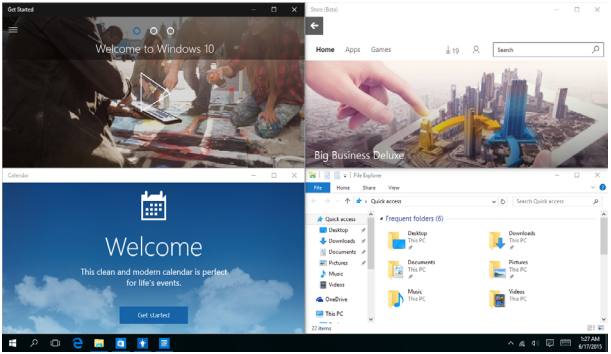

Snap hotspots

You can drag and drop apps to these hotspots to snap them into place.

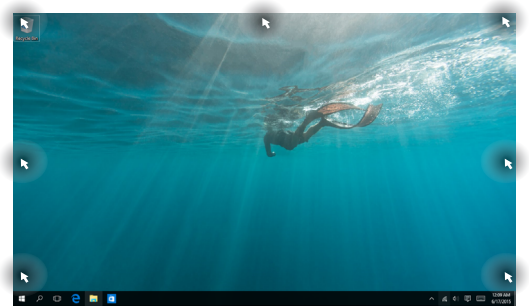

Using Snap

1. Launch the app you wish to snap.
2. Drag the title bar of your app and drop the app to the edge of the screen to snap.
3. Launch another app and repeat the above steps to snap another app.

1. Launch the app you wish to snap.
2. Press and hold the ⊞ key, then use the arrow keys to snap the app.
3. Launch another app and repeat the above steps to snap another app.

Action Center

Action Center consolidates notifications from apps and presents a single place where you can interact with them. It also has a really useful Quick Actions section at the bottom.

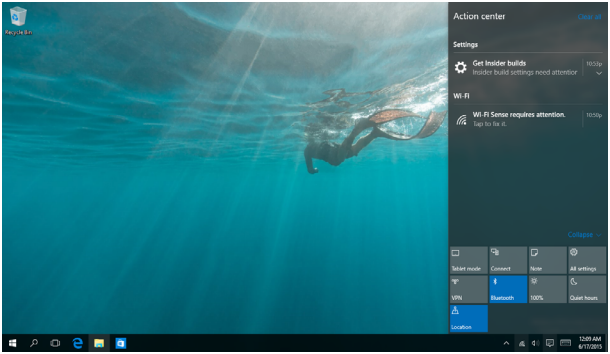

Launching Action Center

Position your mouse pointer over the icon on the taskbar and click it.

Press + on your keyboard.

Other keyboard shortcuts

Using the keyboard, you can also use the following shortcuts to help you launch applications and navigate Windows® 10.

⊞	Launches **Start menu**
⊞ + A	Launches **Action Center**
⊞ + D	Launches the desktop
⊞ + E	Launches the **File Explorer**
⊞ + H	Opens the **Share** panel
⊞ + I	Launches **Settings**
⊞ + K	Launches **Connect** panel
⊞ + L	Activates the Lock screen
⊞ + M	Minimizes all currently active windows

+ S	Launches **Search**
+ P	Launches **Project** panel
+ R	Opens the **Run** window
+ U	Opens **Ease of Access Center**
+ X	Opens the context menu of the Start button
+ + =	Launches the magnifier icon and zooms in your screen
+ – –	Zooms out your screen
+ enter	Opens **Narrator Settings**

Connecting to wireless networks

Wi-Fi

Access emails, surf the Internet, and share applications via social networking sites using your ASUS All-in-One PC's Wi-Fi connection.

Connecting Wi-Fi

Connect your ASUS All-in-One PC to a Wi-Fi network by using the following steps:

1. Select the icon from the taskbar.
2. Select the

icon to enable Wi-Fi.
3. Select an access point from the list of available Wi-Fi connections.
4. Select **Connect** to start the network connection.

NOTE: You may be prompted to enter a security key to activate the Wi-Fi connection.

Bluetooth

Use Bluetooth to facilitate wireless data transfers with other Bluetooth-enabled devices.

Pairing with other Bluetooth-enabled devices

You need to pair your ASUS All-in-One PC with other Bluetooth-enabled devices to enable data transfers. Connect your devices by using the following steps:

1. Launch **Settings** from the Start menu.
2. Select **Devices**, then select **Bluetooth** to search for Bluetooth-enabled devices.
3. Select a device from the list. Compare the passcode on your ASUS All-in-One PC with the passcode sent to your chosen device. If they are the same, select **Yes** to successfully pair your ASUS All-in-One PC with the device.

NOTE: For some bluetooth-enabled devices, you may be prompted to key in the passcode of your ASUS All-in-One PC.

Connecting to wired networks

You can also connect to wired networks, such as local area networks and broadband Internet connection, using your ASUS All-in-One PC's LAN port.

NOTE: Contact your Internet Service Provider (ISP) for details or your network administrator for assistance in setting up your Internet connection.

To configure your settings, refer to the following procedures.

IMPORTANT! Ensure that a network cable is connected between your ASUS All-in-One PC's LAN port and a local area network before performing the following actions.

Configuring a dynamic IP/PPPoE network connection

1. Launch **Settings**.
2. Select **Network & Internet**.
3. Select **Ethernet** > **Network and Sharing Center**.
4. Select your LAN then select **Properties**.
5. Select **Internet Protocol Version 4(TCP/IPv4)** then select **Properties**.
6. Select **Obtain an IP address automatically** then select **OK**.

NOTE: Proceed to the next steps if you are using PPPoE connection.

7. Return to the **Network and Sharing Center** window then select **Set up a new connection or network**.

8. Select **Connect to the Internet** then select **Next**.

9. Select **Broadband (PPPoE)**.

10. Type your User name, Password, and Connection name then select **Connect**.

11. Select **Close** to finish the configuration.

12. Select on the taskbar then select the connection you just created.

13. Type your user name and password then select **Connect** to start connecting to the Internet.

Configuring a static IP network connection

1. Repeat steps 1 to 5 under *Configuring a dynamic IP/PPPoE network connection***.**

2 Select **Use the following IP address**.

3. Type the IP address, Subnet mask and Default gateway from your service provider.

4. If needed, you can also type the preferred DNS server address and alternate DNS server address then select **OK**.

Turning your ASUS All-in-One PC off

You can turn off your ASUS All-in-One PC by doing either of the following procedures:

- Launch the Start menu, then select Power > **Shut down** to do a normal shutdown.
- From the log-in screen, select > **Shut down**.

- Press alt + f4 to launch Shut Down Windows. Select **Shut Down** from the drop-down list then select **OK**.
- If your ASUS All-in-One PC is unresponsive, press and hold the power button for at least four (4) seconds until your ASUS All-in-One PC turns off.

Putting your ASUS All-in-One PC to sleep

To put your ASUS All-in-One PC to Sleep mode:

- Launch the Start menu, then select Power > **Sleep** to put your ASUS All-in-One PC to sleep.
- From the log-in screen, select > **Sleep**.

Press alt + f4 to launch Shut Down Windows.

Select **Sleep** from the drop-down list then select **OK**.

NOTE: You can also put your ASUS All-in-One PC to Sleep mode by pressing the power button once.

Chapter 4: Recovering your system

Entering the BIOS Setup

BIOS (Basic Input and Output System) stores system hardware settings that are needed for system startup in the ASUS All-in-One PC.

In normal circumstances, the default BIOS settings apply to most conditions to ensure optimal performance. Do not change the default BIOS settings except in the following circumstances:

- An error message appears on the screen during the system bootup and requests you to run the BIOS Setup.
- You have installed a new system component that requires further BIOS settings or update.

WARNING! Inappropriate BIOS settings may result to instability or boot failure. We strongly recommend that you change the BIOS settings only with the help of a trained service personnel.

Quickly enter the BIOS

To access the BIOS:

- When your ASUS All-in-One PC is off, press the power button for at least four (4) seconds to access the BIOS directly.
- Press the power button to turn on your ASUS All-in-One PC then press <F2> or <Del> during POST.

NOTE: POST (Power-On Self-Test) is a series of software controlled diagnostic tests that run when you turn on your ASUS All-in-One PC.

Recovering your system

Using recovery options on your ASUS All-in-One PC allows you to restore the system to its original state or simply refresh its settings to help improve performance.

IMPORTANT!

- Backup all your data files before doing any recovery option on your ASUS All-in-One PC.
- Note down important customized settings such as network settings, user names, and passwords to avoid data loss.
- Ensure that your ASUS All-in-One PC is plugged in to a power source before resetting your system.

Windows® 10 allows you to do any of the following recovery options:

- **Keep my files** - This option allows you refresh your ASUS All-in-One PC without affecting personal files (photos, music, videos, documents).

  Using this option, you can restore your ASUS All-in-One PC to its default settings and delete other installed apps.

- **Remove everything** - This option resets your ASUS All-in-One PC to its factory settings. You must backup your data before doing this option.

- **Go back to an earlier build** - This option allows you to go back to an earlier build. Use this option if this build is not working for you.
- **Advanced startup** - Using this option allows you to perform other advanced recovery options on your ASUS All-in-One PC such as:
  - Using a USB drive, network connection or Windows recovery DVD to startup your ASUS All-in-One PC.
  - Using **Troubleshoot** to enable any of these advanced recovery options: System Restore, System Image Recovery, Startup Repair, Command Prompt, UEFI Firmware Settings, and Startup Settings.

Performing a recovery option

Refer to the following steps if you want to access and use any of the available recovery options for your ASUS All-in-One PC.

1. Launch **Settings and select Update and security**.

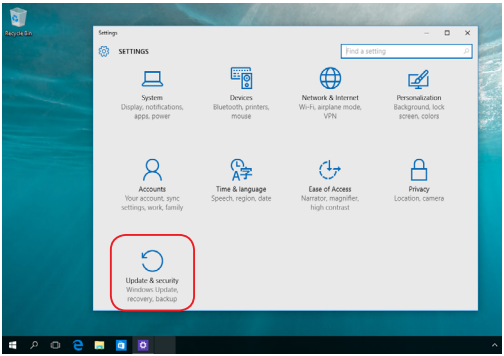

2. Under the **Update and security** option, select **Recovery** then select the recovery option you would like to perform.

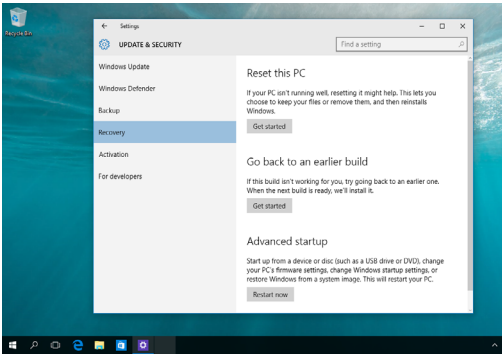

Chapter 5: Upgrading your ASUS All-in-One PC

Installing a Random-access Memory module

Upgrade the memory capacity of your ASUS All-in-One PC by installing a RAM (random-access memory module) in the memory module compartment.

WARNING! Disconnect all the connected peripherals, any telephone or telecommunication lines and power connector (such as external power supply, battery pack, etc.) before removing the compartment cover.

IMPORTANT!

- Only ASUS-authorized technicians should remove and install the RAM module inside your All-in-One PC. Please refer to the terms and conditions in the warranty card.
- Visit an authorized service center or retailer for information on RAM module upgrades for your ASUS All-in-One PC.
- Purchase RAM modules from authorized retailers of this ASUS All-in-One PC to ensure maximum compatibility and reliability.

NOTE: The appearance of the RAM module may vary per model but the RAM module installation remains the same.

To install a RAM module:

1. Loosen the screw of the ASUS All-in-One PC's compartment cover.
2. Pull out the compartment cover and remove it completely from your ASUS All-in-One PC, then set it aside.
3. Remove the metal cover (on selected models) then set aside.

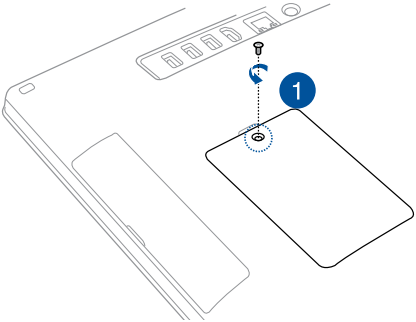

4. Get the RAM module.

5. Align and insert the RAM module into the RAM module slot (A) then push it down until it clicks in place (B).

NOTE:

- Use both hands in performing this step.
- The RAM module fits in one orientation only. If it does not fit, try reversing it.
- Ensure that the RAM module is seated securely in place. The side notches of the RAM module should be firmly fixed in place.

6. Replace the compartment cover.

7. Secure the compartment cover using the screw that you removed earlier in step 1.

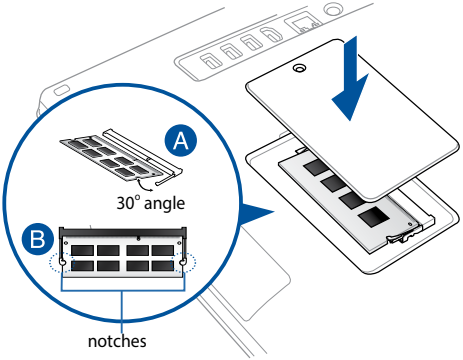

Appendices

Notices

Federal Communication Commission Interference Statement

This equipment has been tested and found to comply with the limits for a Class B digital device, pursuant to Part 15 of the FCC Rules. These limits are designed to provide reasonable protection against harmful interference in a residential installation. This equipment generates, uses and can radiate radio frequency energy and, if not installed and used in accordance with the instructions, may cause harmful interference to radio communications. However, there is no guarantee that interference will not occur in a particular installation. If this equipment does cause harmful interference to radio or television reception, which can be determined by turning the equipment off and on, the user is encouraged to try to correct the interference by one or more of the following measures:

- Reorient or relocate the receiving antenna.
- Increase the separation between the equipment and receiver.
- Connect the equipment into an outlet on a circuit different from that to which the receiver is connected.
- Consult the dealer or an experienced radio/TV technician for help.

FCC Caution: Any changes or modifications not expressly approved by the party responsible for compliance could void the user's authority to operate this equipment.

This device complies with Part 15 of the FCC Rules. Operation is subject to the following two conditions: (1) This device may not cause harmful interference, and (2) this device must accept any interference received, including interference that may cause undesired operation.

This device and its antenna(s) must not be co-located or operating in conjunction with any other antenna or transmitter.

This device is restricted to indoor use when operated in the 5.15 to 5.25 GHz frequency range.

This device complies with Industry Canada licence-exempt RSS standard(s). Operation is subject to the following two conditions: (1) this device may not cause interference, and (2) this device must accept any interference, including interference that may cause undesired operation of the device

RF exposure warning

The equipment complies with FCC RF exposure limits set forth for an uncontrolled environment.

The equipment must not be co-located or operating in conjunction with any other antenna or transmitter.

IMPORTANT! Outdoor operations in the 5.15~5.25 GHz band is prohibited. This device has no Ad-hoc capability for 5250~5350 and 5470~5725 MHz.

CAUTION: Any changes or modifications not expressly approved by the guarantee of this device could void the user's authority to operate the equipment.

Canadian Department of Communications Statement

This digital apparatus does not exceed the Class B limits for radio noise emissions from digital apparatus set out in the Radio Interference Regulations of the Canadian Department of Communications.

This class B digital apparatus complies with Canadian ICES-003.

IC Radiation Exposure Statement for Canada

This equipment complies with IC radiation exposure limits set forth for an uncontrolled environment. To maintain compliance with IC RF exposure compliance requirements, please avoid direct contact to the transmitting antenna during transmitting. End users must follow the specific operating instructions for satisfying RF exposure compliance.

Operation is subject to the following two conditions:

- This device may not cause interference and
- This device must accept any interference, including interference that may cause undesired operation of the device.

Canada, Industry Canada (IC) Notices

This Class B digital apparatus complies with Canadian ICES-003 and RSS-210. Operation is subject to the following two conditions:

1) this device may not cause interference, and 2) this device must accept any interference, including interference that may cause undesired operation of the device.

Radio Frequency (RF) Exposure Information

The radiated output power of the wireless device is below the Industry Canada (IC) radio frequency exposure limits. The wireless device should be used in such a manner such that the potential for human contact during normal operation is minimized.

Canada, avis d'Industry Canada (IC)

Cet appareil numerique de classe B est conforme aux normes canadiennes ICES-003 et RSS-210.

Son fonctionnement est soumis aux deux conditions suivantes: 1) cet appareil ne doit pas causer d'interference et 2) cet appareil doit accepter toute interference, notamment les interferences qui peuvent affecter son fonctionnement.

Informations concernant l'exposition aux frequences radio (RF)

La puissance de sortie emise par l'appareil de sans fil est inferieure a la limite d'exposition aux frequences radio d'Industry Canada (IC). Utilisez l'appareil de sans fil de facon a minimiser les contacts humains lors du fonctionnement normal.

India RoHS

This product complies with the "India E-waste (Management and Handling) Rule 2011" and prohibits use of lead, mercury, hexavalent chromium, polybrominated biphenyls (PBBs), and polybrominated diphenyl ethers (PBDEs) in concentrations exceeding 0.1 % by weight in homogenous materials and 0.01 % by weight in homogenous materials for cadmium, except for the exemptions listed in Schedule-II of the Rule.

Declaration of Conformity (R&TTE directive 1999/5/EC)*

** Replaced in 2017 by RED 2014/53/EU*

The following items were completed and are considered relevant and sufficient:

Essential requirements as in [Article 3]

Protection requirements for health and safety as in [Article 3.1a]

Testing for electric safety according to [EN 60950]

Protection requirements for electromagnetic compatibility in [Article 3.1b]

Testing for electromagnetic compatibility in [EN 301 489-1] & [EN 301 489-17]

Effective use of the radio spectrum as in [Article 3.2]

Radio test suites according to [EN 300 328-2]

Wireless Operation Channel for Different Domains

N. America	2.412-2.462 GHz	Ch01 through CH11
Japan	2.412-2.484 GHz	Ch01 through Ch14
Europe ETSI	2.412-2.472 GHz	Ch01 through Ch13

In the frequency band 5 150-5 350 MHz, WAS/RLANs shall be restricted to indoor use.

CE Mark Warning

This is a Class B product, in a domestic environment, this product may cause radio interference, in which case the user may be required to take adequate measures.

CE

CE marking for devices without wireless LAN/ Bluetooth

The shipped version of this device complies with the requirements of the EEC directives 2004/108/EC (replaced in April 2016 by 2014/30/EU) "Electromagnetic compatibility" and 2006/95/EC (replaced in April 2016 by 2014/35/EU) "Low voltage directive".

CE / CE ⓘ

CE marking for devices with wireless LAN/ Bluetooth

This equipment complies with the requirements of Directive 1999/5/EC (replaced in 2017 by RED 2014/53/EU) of the European Parliament and Commission from 9 March, 1999 governing Radio and Telecommunications Equipment and mutual recognition of conformity.

ⓘ is for class II device.

NO DISASSEMBLY

The warranty does not apply to the products that have been disassembled by users

Lithium-Ion Battery Warning

CAUTION: Danger of explosion if battery is incorrectly replaced. Replace only with the same or equivalent type recommended by the manufacturer. Dispose of used batteries according to the manufacturer's instructions.

No Exposure to Liquids

DO NOT expose to or use near liquids, rain, or moisture. This product is not waterproof or oil-proof.

This symbol of the crossed out wheeled bin indicates that the product (electrical, electronic equipment, and mercury-containing button cell battery) should not be placed in municipal waste. Check local regulations for disposal of electronic products.

DO NOT throw the battery in municipal waste. The symbol of the crossed out wheeled bin indicates that the battery should not be placed in municipal waste.

請勿將電池當作一般垃圾丟棄。這個標誌表示電池不應視為一般垃圾丟棄。

REACH

Complying with the REACH (Registration, Evaluation, Authorization, and Restriction of Chemicals) regulatory framework, we publish the chemical substances in our products at ASUS REACH website at http://csr.asus.com/english/REACH.htm.

Global Environmental Regulation Compliance and Declaration

ASUS follows the green design concept to design and manufacture our products, and makes sure that each stage of the product life cycle of ASUS product is in line with global environmental regulations. In addition, ASUS disclose the relevant information based on regulation requirements.

Please refer to http://csr.asus.com/english/Compliance.htm for information disclosure based on regulation requirements ASUS is complied with:

Japan JIS-C-0950 Material Declarations

EU REACH SVHC

Korea RoHS

ASUS Recycling/Takeback Services

ASUS recycling and takeback programs come from our commitment to the highest standards for protecting our environment. We believe in providing solutions for you to be able to responsibly recycle our products, batteries, other components as well as the packaging materials. Please go to http://csr.asus.com/english/Takeback.htm for detailed recycling information in different regions.

Coating Notice

IMPORTANT! To provide electrical insulation and maintain electrical safety, a coating is applied to insulate the device except on the areas where the I/O ports are located.

Prevention of Hearing Loss

To prevent possible hearing damage, do not listen at high volume levels for long periods.

A pleine puissance, l'écoute prolongée du baladeur peut endommager l'oreille de l'utilisateur.

ENERGY STAR complied product

ENERGY STAR is a joint program of the U.S. Environmental Protection Agency and the U.S. Department of Energy helping us all save money and protect the environment through energy efficient products and practices.

All ASUS products with the ENERGY STAR logo comply with the ENERGY STAR standard, and the power management feature is enabled by default. The monitor and computer are automatically set to sleep after 10 and 30 minutes of user inactivity. To wake your computer, click the mouse or press any key on the keyboard.

Please visit http://www.energystar.gov/powermanagement for detail information on power management and its benefits to the environment. In addition, please visit http://www.energystar.gov for detail information on the ENERGY STAR joint program.

NOTE: ENERGY STAR is NOT supported on FreeDOS and Linux-based products.

Manufacturer	ASUSTeK Computer Inc.	
	Tel:	+886-2-2894-3447
	Address:	4F, No. 150, LI-TE RD., PEITOU, TAIPEI 112, TAIWAN
Authorised representative in Europe	ASUSTeK Computer GmbH	
	Address:	HARKORT STR. 21-23, 40880 RATINGEN, GERMANY